Solenoid Valves - TYPE:LCV-GS

technical parameter

Solenoid valve meetst EN161，Class A，Group 2 standard.

Connection：≦DN50 pipe threaded connection

≧DN80 standard flanged connection

DN65 pipe thread, standard flange two connections

Maximum working pressure：0.2 or 0.36 bar

Ambient temperature range：-15°C～+60°C

Power supply ：220－240VAC 50/60Hz

Capacitance：-15%～+10%

Protection class: IP54

Insulation strength: 1500VAC/1min

Coil grade: Copper wire. Class F

Power consumption:

Model（LCV-GS10、LCV-GS15）.....7.5W

Model（LCV-GS20、LCV-GS25）.....10W

Model（LCV-GS32、LCV-GS40）.....18W

Model（LCV-GS50） 20W

Model（LCV-GS65） 40W

Model（LCV-GS80） 55W

Model（LCV-GS100） 85W

Electricity safety level: 1

Switching time：＜1 second

LCV-GS65-100 with flow adjustment：from 0% to 100%

On-off frequency：＜20 次/分

Fuel ： city gas, natural gas, liquefied gas, non-corrosive gas.

Whatever the conditions, it must be guaranteed that the gas is dry and free of condensate.

Pressure tube connection: The solenoid valve inlet (P1) and outlet (P2) are equipped with G1/4 pressure test ports.

Material: aluminum body and valve cover; steel valve core; nitrile rubber gasket and O-ring; other parts of the material are brass, aluminum, galvanized steel.

Dimensions

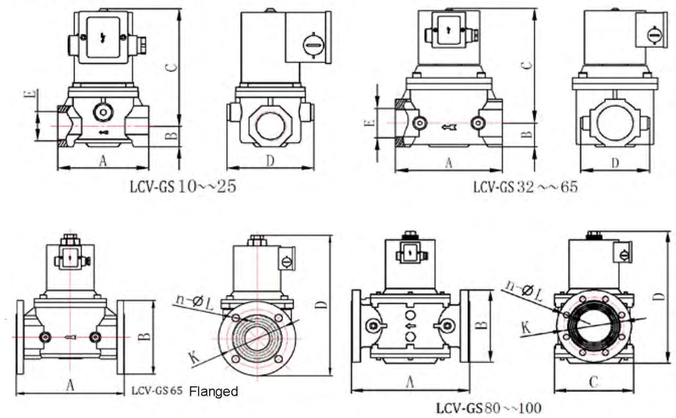

Model	Connection caliber	A	B	C	D	E	K	n-ØL	Connection type
LCV-GS10	DN10	70	15	102	72	G 3/8"	---	---	Threaded
LCV-GS15	DN15	70	15	102	72	G½"	---	---	Threaded
LCV-GS20	DN20	98	23	131	93.5	G¾"	---	---	Threaded
LCV-GS25	DN25	98	23	131	93.5	G1"	---	---	Threaded
LCV-GS32	DN32	148	31.5	181.5	93.5	G1¼"	---	---	Threaded
LCV-GS40	DN40	148	31.5	181.5	93.5	G1½"	---	---	Threaded
LCV-GS50	DN50	169	39	189	109.5	G2"	---	---	Threaded
LCV-GS65	DN65	221	54	257	136	G2½"	---	---	Threaded
		259	Φ185	---	349.5	---	Φ145	4-Φ18	Flanged
LCV-GS80	DN80	313	Φ200	Φ212	367	---	Φ160	8-Φ18	Flanged
LCV-GS100	DN100	352	Φ220	Φ238	426.5	---	Φ180	8-Φ18	Flanged

Flow Chart

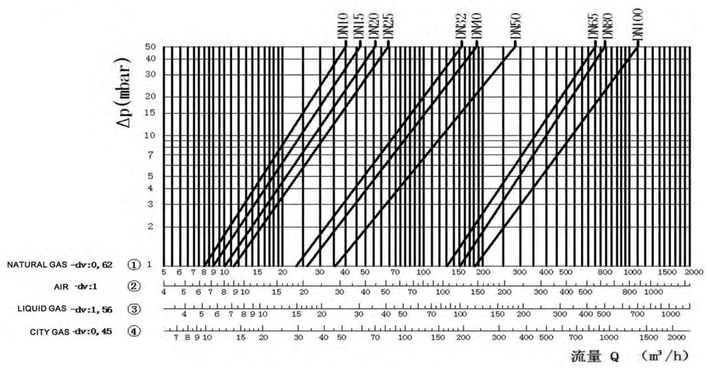

Solenoid Valves LCV-GS
LENC ENERGY A Member of Eacoon Group

Solenoid Valves - TYPE:LCV-GS

Model Options Example

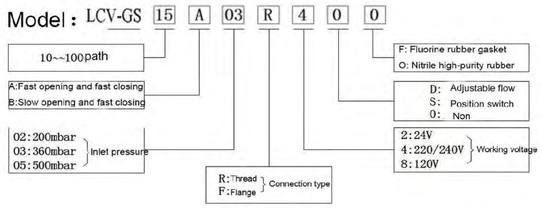

Example：LCV-GS15A03R400

Note: Viton is orange in color

Features

★The valve is normal closed.

★When the power is off, the gas is prevented from passing by the spring (11) acting on the valve plug (10).

★The pressure of the inflow gas can increase the seal of spool.

★When power is on, the coil（3）attracts the valve core （10） to oppen the gas.

★ The coil will heat up during operation–Depens on the surrounding temperature and voltage

★When the power is cut off, the spring closes the spool.

★ The change in gas flow can be achieved by adjusting the flow adjustment screw.

adjustment screw.

Description

LCV-GS is a normally closed solenoid valve. The product complies with UNI-EN161 standard and can be applied to gas burners and gas appliances.

Its standard components and compact structure make it possible to install multiple solenoid valves in different sizes of many devices.

Installation

LCV-GS vale can be installed on the vertical and horizontal pipes and the coil is facing up when it is installed on a horizontal pipe.

The following instructions should be followed during installation:

1. Please check whether the connector is matched with the solenoid valve interface in installation
2. Make sure the pipeline is tidy and free from obstructions or impurities.
3. Make sure to install in the air flow direction indicated by the arrows on the valve body
4. To check all parameters such as pressure, voltage, and temperature to ensure they are in the range of use.
5. To avoid installing on the unstable basis.
6. Make sure there is enough space for maintenance and adjustment.
7. To install a filter upstream of the valve
8. Do not store or install the valve in the open air.
9. The coil must be powered by the qualified professionals and strictly follow the regulations

Installation instructions

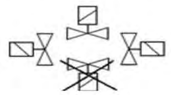

Power connection

★ Using 1mm² grade 3 heat-resistant cable with the finest part at the top

★Cut off the gas supply

★Pass the cable through the cable entry of the valve

(If necessary, you can change the position of the cable entry and the plug)

★Do not connect the system's power supply

★Open the cover of the electrical junction box 14

★Cover the electrical box cover

Structure diagram

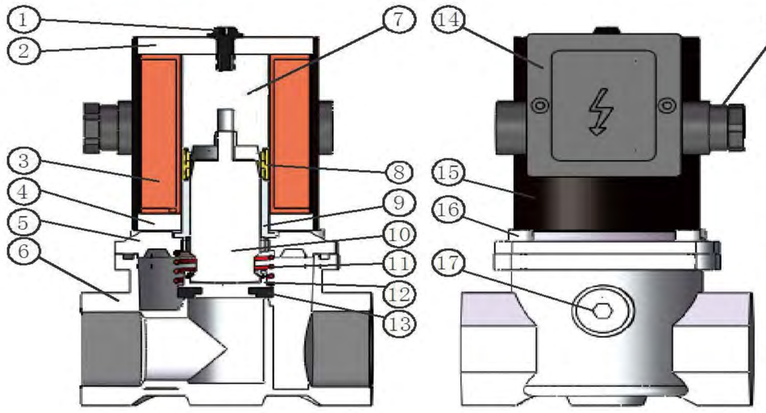

1. The coil fixes the hexagon screw
2. Coil shell upper cover
3. Coil
4. Coil shell bottom cover
5. Upper cover
6. Shell
7. Static core
8. Static iron core copper joint
9. Bottom joint of static iron
10. Move valve core
11. Close the spring
12. Valve core moving cover
13. Rubber mat
14. Junction box
15. Coil shell
16. Fixing bolts
17. Pressure measuring hole
18. Cable entrance