Rotary Electric Actuator - TYPE:LC-BT-40

LC-BT-40 Series Rotary Electric Actuator is specially used in controling of 0-90 °or 0-160 ° Corner travel. Available for operating and controlling all kinds of butterfly valves, ball valves, plug valves, ventilation valves and other valve devices.

- 3-point control signal and adjust control signal (4-20mA) used for continuous controling,
- 2- point control signal for turn on / off or two point position controling
- Can be equipped with two-bit position auxiliary switch
- 3-point control signal and 2-point control signal are equipped with manual / automatic switch, convenient for installation, debugging and general maintenance.
- Position output signals have resistor and current / voltage options

Product Specifications

Supply Voltage:	220VAC 24VAC 110VAC 50/60Hz
Control Signal:	4-20mA 1-5V 0-10V
Running Time:	55s(90°) 30s (90°) 15s(90°) 5s(90°) 3.3S（90°）
Output Shaft Torque:	55s(40Nm) 30s(25Nm) 15s(15Nm) 5s(5Nm) 3.3S（5Nm）
Operating Environment:	-30℃～ +60°C
Protection Class:	IP54 IP67 (Optional)
Installing Direction:	360°installed at any angle
Corner Travel:	0-90° adjustable or 0-160° adjustable
Motor Power:	15W
Insulation Resistance:	100MΩ/500VDC
Compressive Strength:	1500VAC/1min
Net Weight:	3.2Kg

Installation Environment

- This product is an non-explosion-proof item, please avoid used under the flammable, explosive and other similar environments.
- Protection measures need to be installed, if the long-term raining, oil &other flying objects, and especially under the impact of direct sunlight environments.
- Please reserve space for maintenance such as wiring and manual operation etc., The environmental.
- conditions temperature is in the range of -30 to +60°C

Rotary Electric Actuator

Rotary Electric Actuator - TYPE:LC-BT-40

Model Selection
Model Example: LC-BT-40-A-5S-01

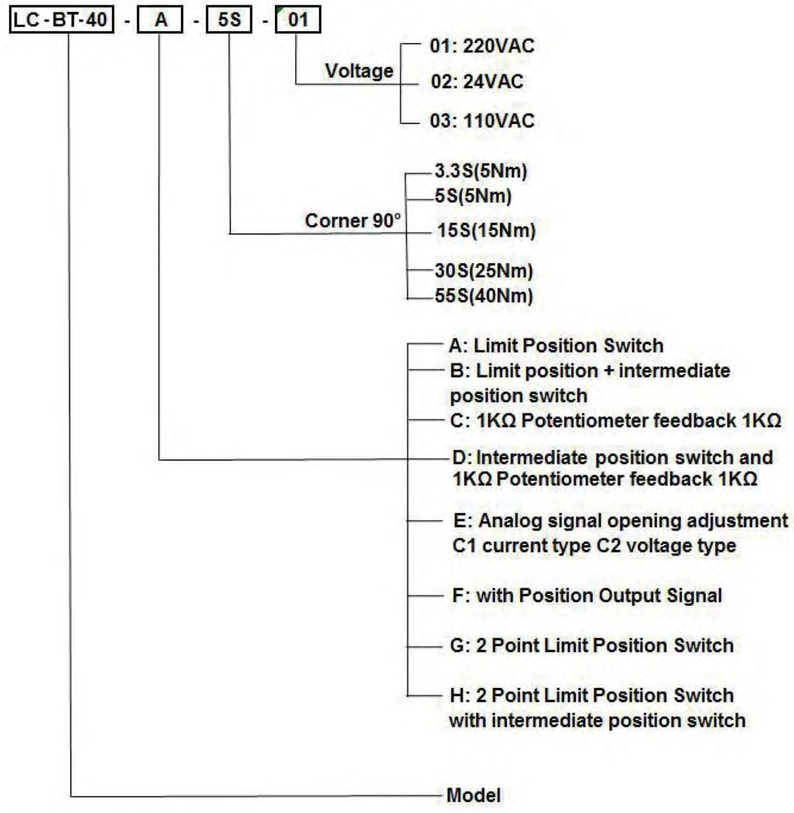

Control Circuit Wiring Diagram

Type A: Limit Position Switch

Features: Actualizing Open and Close operations through AC (alternating current) switching value, and output a group of active position signals to indicate full-opened and full-closed.

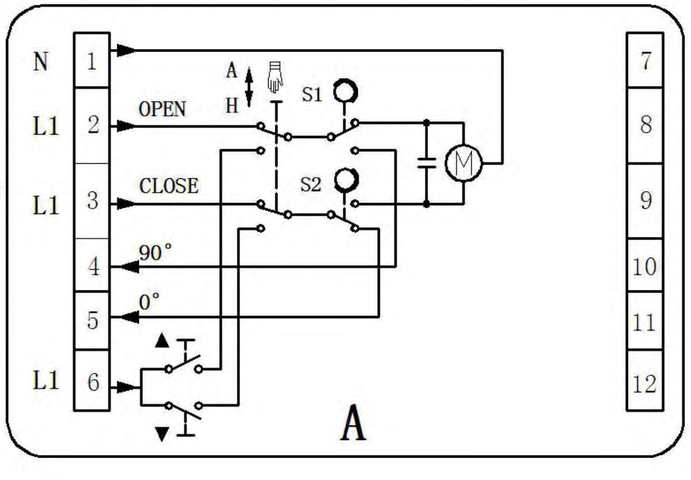

Rotary Electric Actuator - TYPE:LC-BT-40

Type B: with 2 Intermediate Auxiliary Position Switches

Features: Actualizing Open and Close operations through AC(alternating current) switching value, and output a group of passive contact signals corresponding to the full-opened and full-closed positions.

Structure: with 2 intermediate auxiliary position switches.

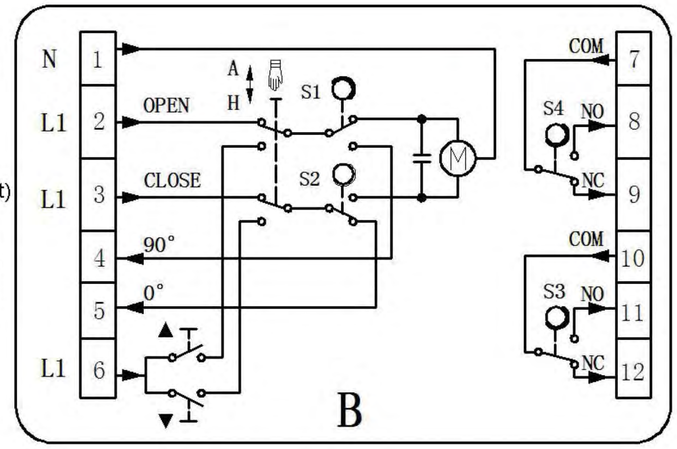

Type C: Electrified Position

Features: Controling the open operation through the switching value, and continuous output the resistive signals that corresponding to the open position.

Structure: with 1KΩ potentiometer.

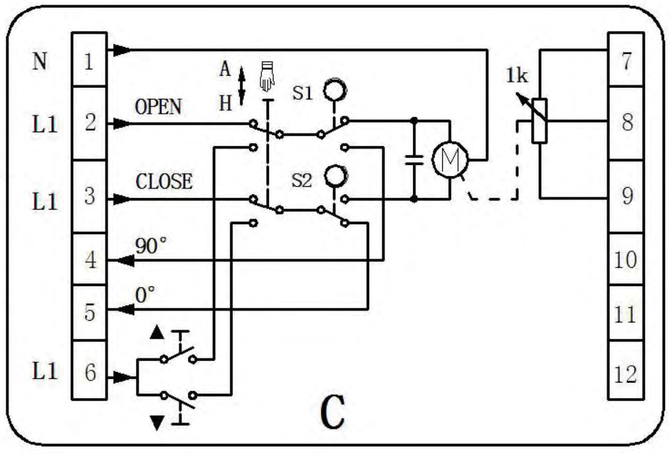

Type D: with Potentiometer and Intermediate Position Switch

Features: Controling the open operation through the switching value, and continuous output the resistive signals that corresponding to the open position, simultaneous output a group of passive contact signals corresponding to the full-opened and full-closed positions.

Structure: with potentiometer and intermediate position switch.

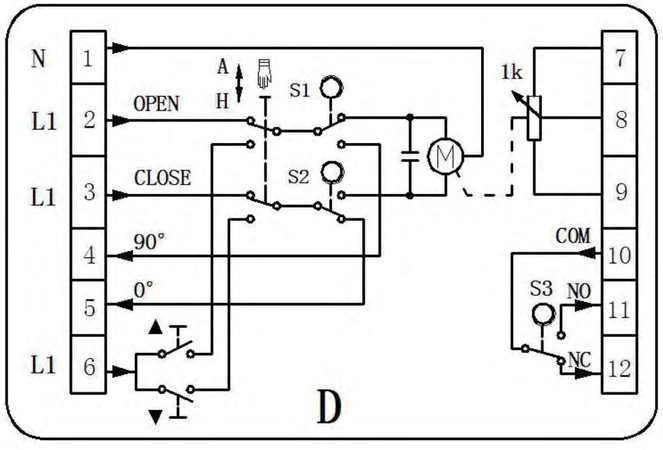

Rotary Electric Actuator

Rotary Electric Actuator - TYPE:LC-BT-40

Type E: with Servo Controller

Features: Through the external input 4-20mADC/1-5VDC analog signal to the opening controlling, continuous output 4-20mADC position signal.

Structure: with electrified position and servo controller

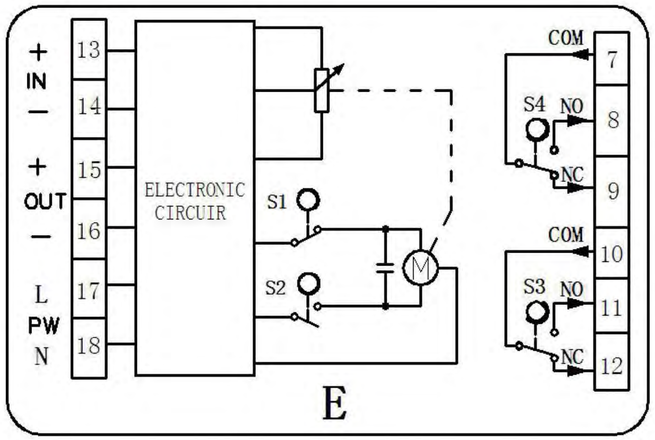

Type F: Position transmitter

Features: Through external AC switching value toachieve the opening controlling, continuous output 4-20mADC position signal.

Structure: with potentiometer and position transmitter.

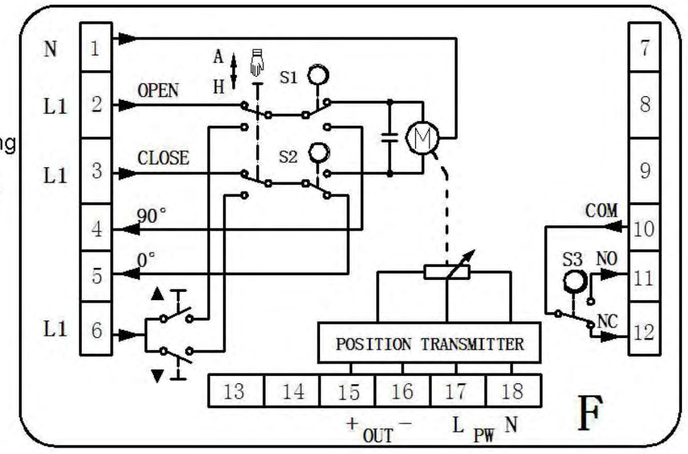

Type G: 2 Point Limit Position Switch

Features: Through the operations of power supply and power-off of terminal 2 to achieve the opening and closing actions, and output a group of full-opened and full-closed active position signals.

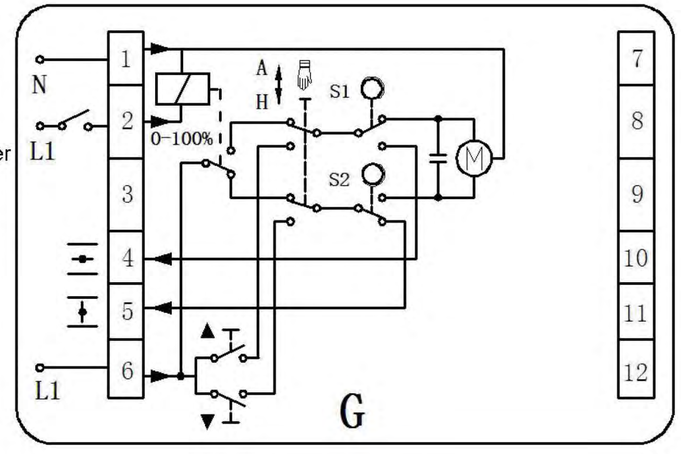

Rotary Electric Actuator - TYPE:LC-BT-40

Type H: 2 Point Limit Position Switch with Intermediate Position Switch.

Features: Through the operations of power supply and power-off of terminal 2 to achieve the opening and closing actions, and output a group of full-opened and full-closed active position signals.

Structure: with 2 intermediate auxiliary position switches.

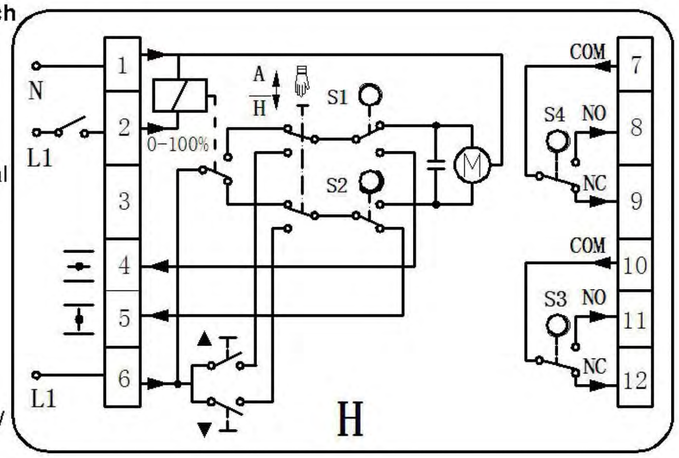

Configuration Table

Configuration Table					
Model	**Control Methods**	**Auxiliary Switch (EA)**	**Position Output Signal**	**Manual/Automatic Switch**	**Travel Time**
LC-BT-40-A...	3-point type	—	—	•	3.3S 5S 15S 30S 55S
LC-BT-40-B...	3-point type	2	—	•	
LC-BT-40-C...	3-point type	—	1K	•	15S 30S 55S
LC-BT-40-D...	3-point type	1	1K	•	
LC-BT-40-E...	4-20mA 1-5VDC	1	4-20mA 1-5VDC	—	30S 55S
LC-BT-40-F...	3-point type	2	4-20mA 1-5VDC	•	15S 30S 55S
LC-BT-40-G...	2-point type	—	—	•	3.3S 5S 15S 30S 55S
LC-BT-40-H...	2-point type	2	—	•	

Dimension Drawings

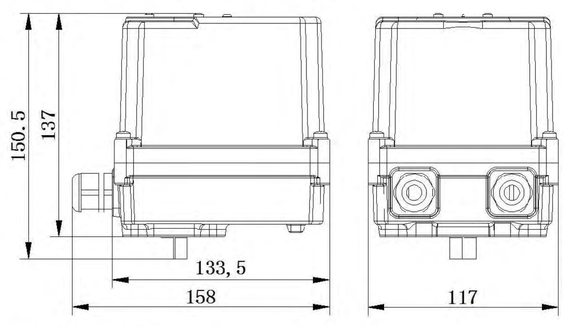

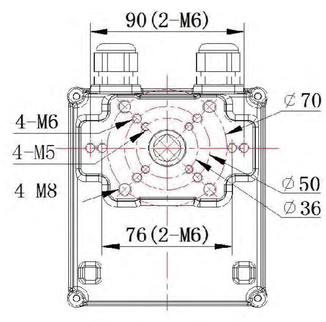

⚠ CAUTION

To avoid personal injury (electric shock) and equipment damage, the power must be cut off before installation.

Electric Actuator - TYPE:LC-Lide-5

Application

Through the external power supply or adjusting the power supply switching signal output by the meter, the output shaft can be used to make the corresponding angular displacement to drive the valve opening/closing actions, then achieving the adjustment of the liquid gas flow.

Features

- ■High performance, high strength
- ■Aluminum alloy die-cast, beautiful and smooth, light and compact
- ■Can be installed at any angle, tightly connected with the valve
- ■Built-in overheat protection function, Double limit and overload protection
- ■Can be manually operated using the supplied crank handle after power is turned off

Model Selection

Model/Features	Lide-5	Lide-10	Lide-20	Lide-40	Lide-60
Output Torque	50 Nm	100 Nm	200 Nm	400 Nm	600 Nm
Travel Time	15/60s	30/60s	30/60s	30/60s	45s
Travel Range	0-90°C	0-360°C	0-90°C	0-90°C	0-90°C
Rated Current	0.25A	0.32A	0.32A	0.54A	0.64A
Driving Motor	10W	25W	40W	90W	100W
control Method	（1）Switch type （2）Feedback Type （3）Adjustable Type				
Power Source	AC/DC 24V AC220V+-10% 50/60Hz				
Motor Protection	Built-in overheat protection				
Limiting Element	Limit position switch, Mechanical travel stop				
Installation Angle	360°C any angle				
Ambient Temperature	-30°C~+60°C				