Rotary Electric Actuator - TYPE: LC-SM-10

Application

LC-SM-10 Series Rotary Electric Actuator is specially used in controling of 0-90 °or 0-160 ° Corner travel. Available used for operating and controlling Drive damper butterfly valves, Gas linear valves and Small ball valves etc.

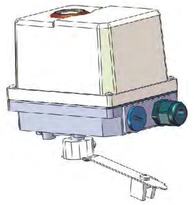

Installation Environment

- This product can be installed indoors / outdoors
- This product is an non-explosion-proof item, please avoid used under the flammable, explosive and other similar environments
- Protection measures need to be installed, if the long-termraining, oil &other flying objects, and especially under the impact of direct sunlight environments.
- Please reserve space for maintenance such as wiring and manual operation etc., The environmental conditions temperature is in the range of -30 to +60°C.

Installation instructions

- Pay attention to the medium temperature when selecting the valves, If the medium temperature is too high, it will be transmitted to the body, which reduces the service life.
- When the temperature of the medium is too high, the fixed support connected to the valve can reduce the heat conduction.
- Medium temperature <80 °C, selecting standard support
- Medium temperature >80 °C, selecting heightened standard support

Dimension Drawings

Valve action:
When 1-2 contacts, turn 0-90 degrees counterclockwise (reverse opening)
When 1-3 contacts, turn 0-90 degrees clockwise (forward closing)
Factory: Set to "0" (off)

Rotary Electric Actuator

Rotary Electric Actuator - TYPE: LC-SM-10

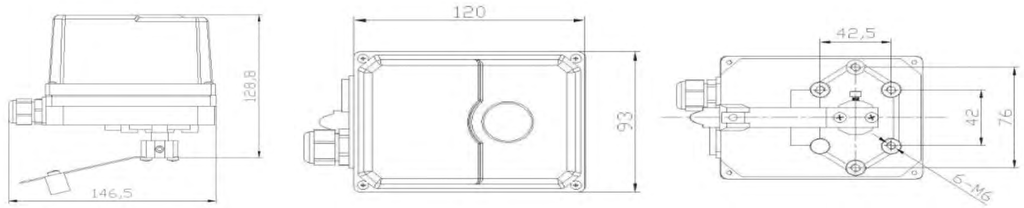

Model Selection

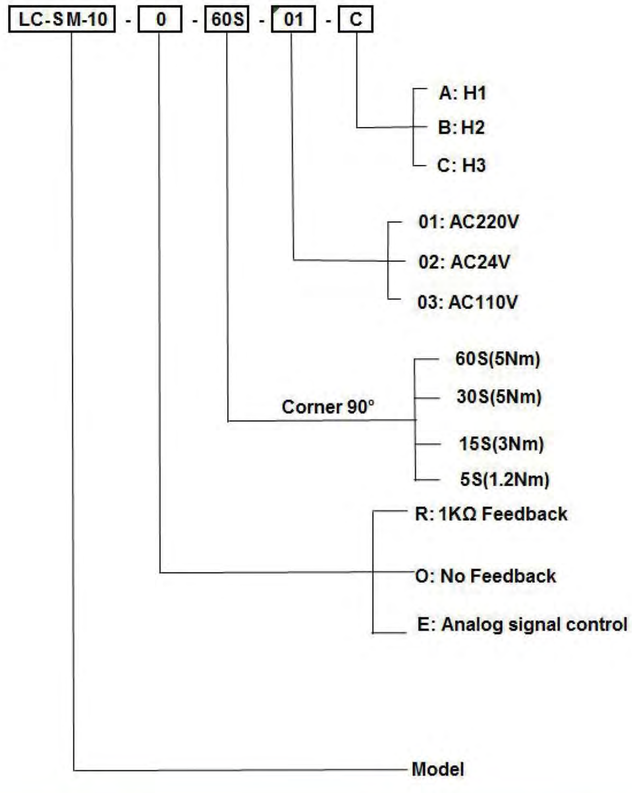

Subject	Technical Specification
Supply Voltage	AC220V AC110V 50/60Hz
Shaft Torque	60S(5Nm) 30S(5Nm) 15S(3Nm) 5S(1.2Nm)
Run Time	60S(90°) 30S(90°) 15S(90°) 5S(90°)
Protection Class	IP54
Installation direction	360°C installation at any angle
Electrical power	4W
Insulation resistance	100MSV/DC500V
Pressure strength	AC1500V/1MIN